YUZHNOYE

# Airspace Rocket Complexes Designed by Yuzhnoye

## Направления разработок
## Trends of developments

Космические комплексы
Space systems

Пусковые услуги
Launch services


Разработка материалов и технологий
Materials and technology development

Расчетно- теоретические работы
Analytical and design efforts

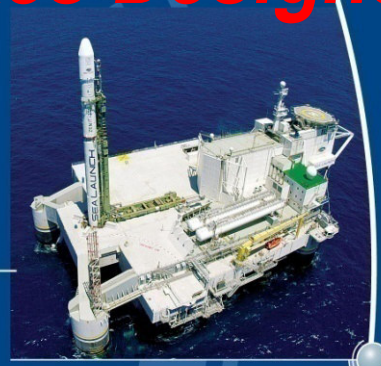


Космические ракетные комплексы
Space launch systems

Испытательные работы
Testing

Боевые ракетные комплексы
Missile complexes

Народнохозяйственные комплексы
National economic complexes

ЮЖНОЕ
конструкторское бюро

Yuzhnoye has been engaged in research and engineering of a spacecraft air-launch system since the end of the 1980s.

More than a dozen of airspace rocket complex (ARC) versions have been considered with different launch vehicles (LV): solid-propellant and liquid-propellant designs with different kinds of propellant.

Yuzhnoye considered ARC with different payload capabilities, a spacecraft mass ranging from dozens of kilograms to 7-8 tons launched on board different air-launch aircraft (ALA): from supersonic fighters to heavy-weight transport giants, An-124 *'Ruslan'* and An-225 *'Mriya'*.

ЮЖНОЕ
конструкторское бюро

In recent years, microsatellites of up to 100 kg and minisatellites of up to 500 kg are the most rapidly growing classes of spacecraft, minisatellites being represented mostly by spacecraft of up to 200-300 kg.

The principal lines of minisatellites development are Earth remote sensing satellites launched into sun-synchronous orbits and auxiliary spacecraft without any strict requirements to orbital parameters.

Small spacecraft and microsatellites are currently launched as

– cluster payloads (by Dnepr, Rockot, PSLV);

– piggy-back payloads (by Ariane-5, Space Shuttle, Zenit-2);

– single payloads (by ARC Pegasus).

The first two microsatellite launch methods require a longer prelaunch period (18 to 24 months), while it takes only around 9 months to manufacture a microsatellite based on conventional industrial components and baseline buses.

Yuzhnoye proposes *Space Clipper* and *Strizh-2* ("Swift") launch systems designed for launching minisatellites and microsatellites, respectively.

# SPACE CLIPPER PROGRAM

Aimed at spacecraft delivery to a wide range of orbit altitudes and inclinations. The airspace rocket complex consists of an upgraded aircraft An-124-100 “*Ruslan*”, two- or three-stage launch vehicle, Aircraft Rocket Launcher, and a ground support system.

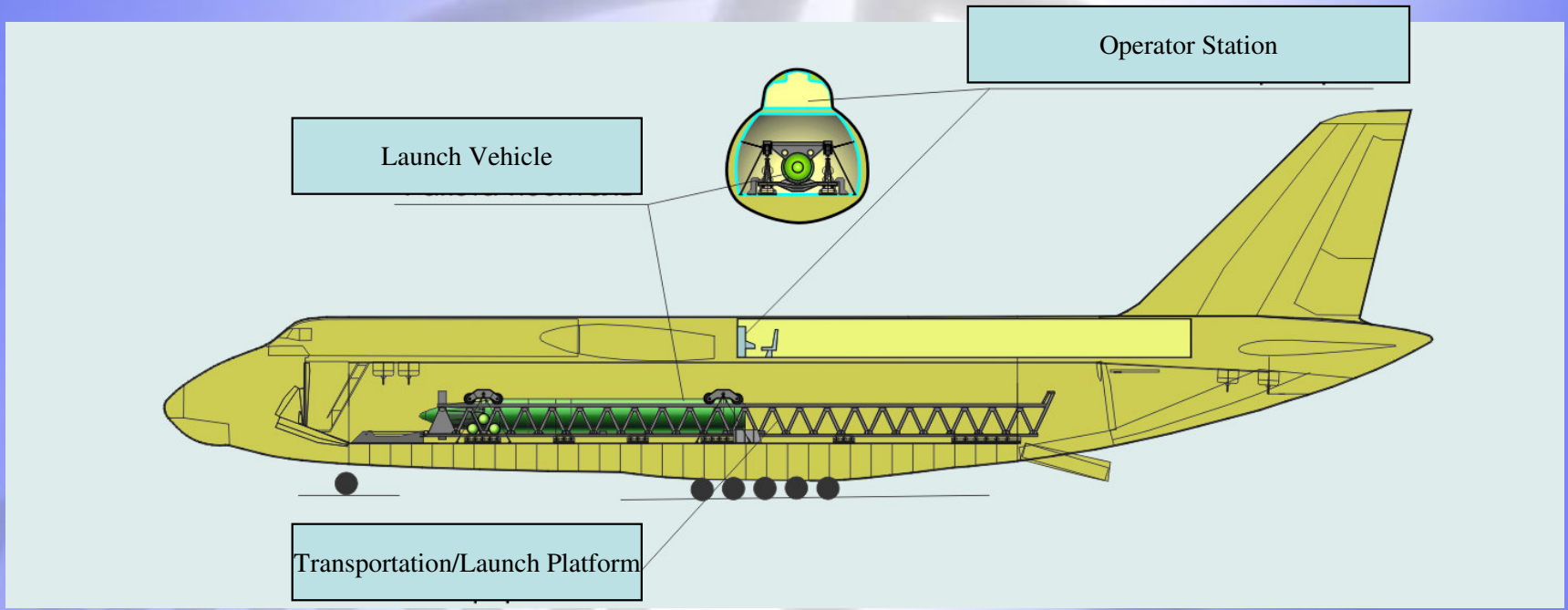

ЮЖНОЕ
конструкторское бюро

Basic requirements to the airspace rocket complex:

- the launch site should have a runway for the An-124-100 “*Ruslan*” take-off and landing;
- operational safety should be ensured during on-ground operations, at transportation and flight;
- high accuracy of spacecraft injection should be ensured;
- if possible, the launch vehicle shall be manufactured using off-the-shelf or proven components and retaining the existing manufacturing procedure.

ЮЖНОЕ конструкторское бюро

# ARC BREAKDOWN

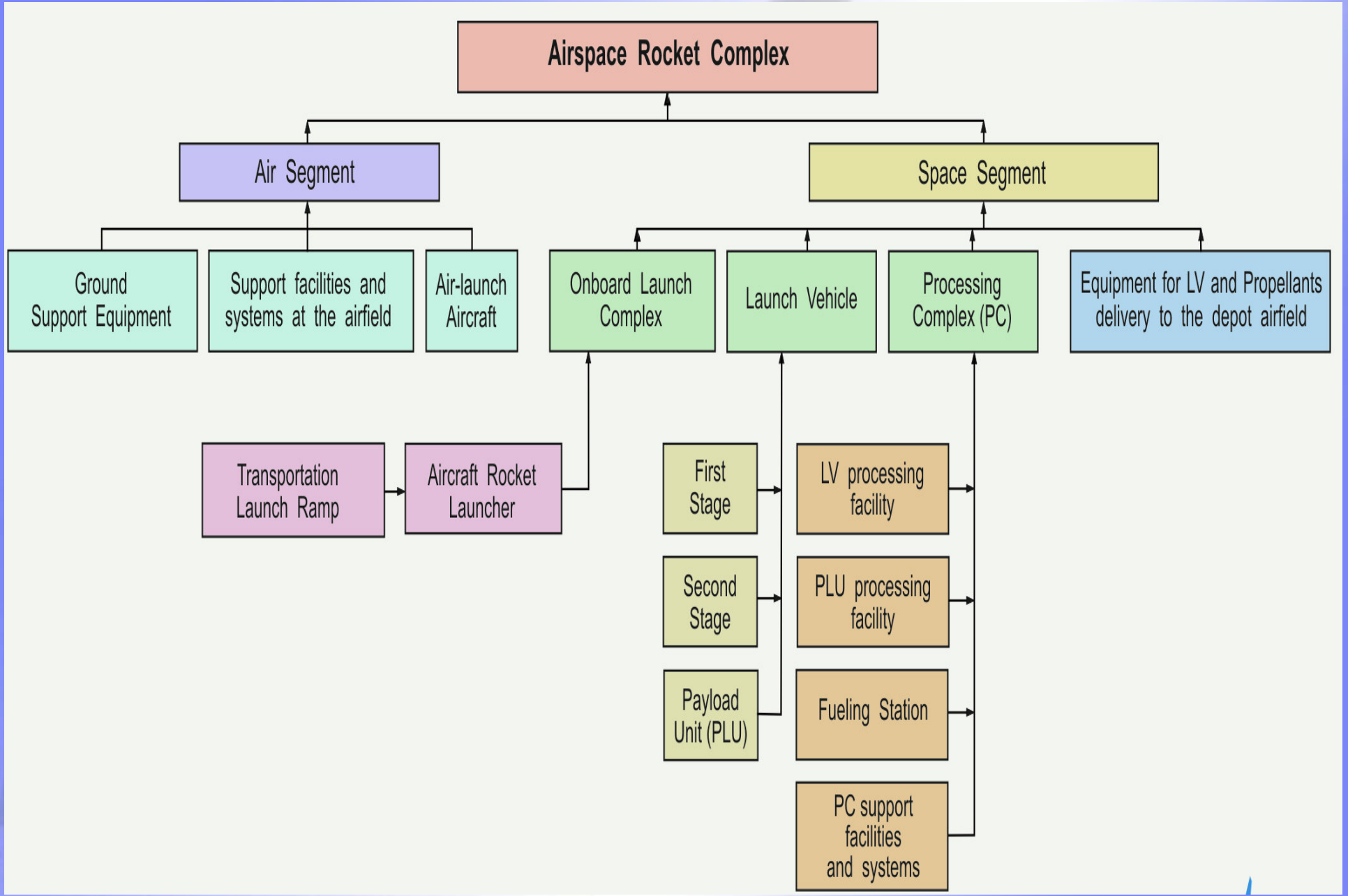

ЮЖНОЕ
конструкторское бюро

# Aircraft Rocket Launcher

Checkout and launch instrumentation is mounted on the air-launch aircraft upper deck, and the aircraft rocket launcher (ARL) is installed on the lower deck. The ARL provides an ejection of a 36-to-70-ton two- or three-stage launch vehicle from the air-launch aircraft.

The ARL provides:

- LV installation and attachment to the ALA;
- shock-free LV ejection from the ALA cargo bay at launch.

# Launch Vehicle Versions

## Two-Stage Launch Vehicle (Version 1)

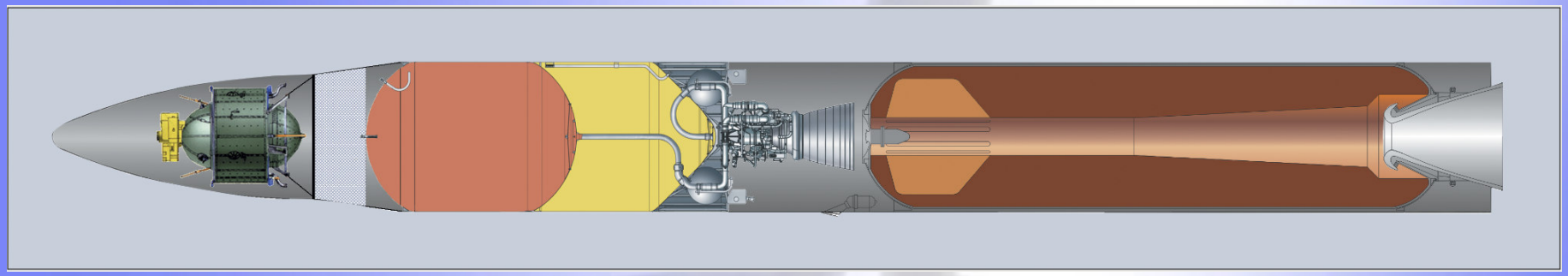

| Specification | Stage 1 (based on SS-25 Solid First Stage) | Stage 2 (based on Cyclone-4 Third Stage) |
|---|---|---|
| Propellant | HTPB | NTO+UDMH |
| Propellant mass, kg | 24,104 | 8,500 |
| Vacuum thrust, kgf | ~126,650/52,700 | ~7,900 |
| Number of burns | 1 | up to three |

The LV launch mass is ~ 37,200 kg.
The payload capability to a 500km 0-deg inclined circular orbit is 500 kg.

ЮЖНОЕ
конструкторское бюро

# Three-Stage Launch Vehicle (Version 2)

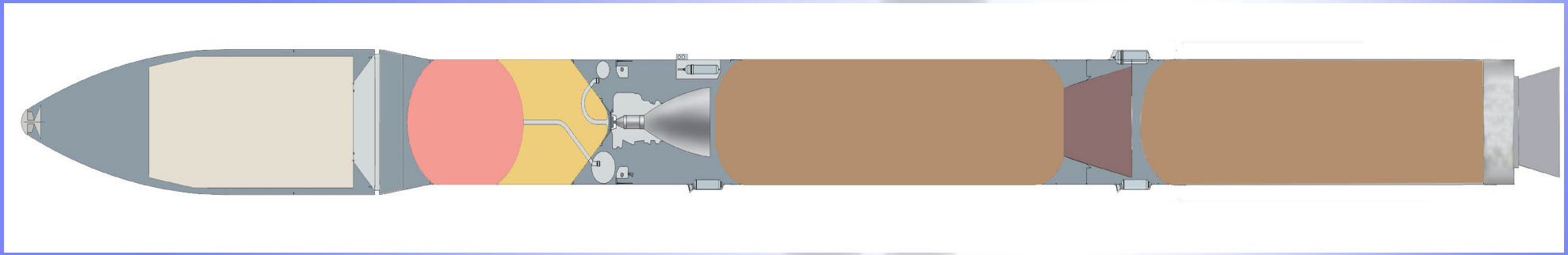

| Specification | Stage 1 | Stage 2 | Stage 3 |
|---|---|---|---|
| | (based on SS-25 Solid First Stage) | (based on SS-25 Solid First Stage) | (based on Cyclone-4 Third Stage) |
| Propellant | HTPB | HTPB | NTO+UDMH |
| Propellant mass, kg | 24,400 | 24,104 | 8,500 |
| Vacuum thrust, kgf | 123,800 | 126,650/ 52,700 | 7,916 |
| Number of burns | 1 | 1 | up to three |

The LV launch mass is ~ 64,550 kg.
The payload capability to a 500km 0-deg inclined circular orbit is 1,000 kg.

ЮЖНОЕ
конструкторское бюро

# “Strizh-2” (“Swift") ARC

Delivery of nanosatellites and microsatellites of up to 100 kg and cluster missions with smaller spacecraft


Supersonic fighters SU-27, MiG-31, etc. were considered as an air-launch aircraft

ЮЖНОЕ конструкторское бюро

# “Strizh-2” BREAKDOWN

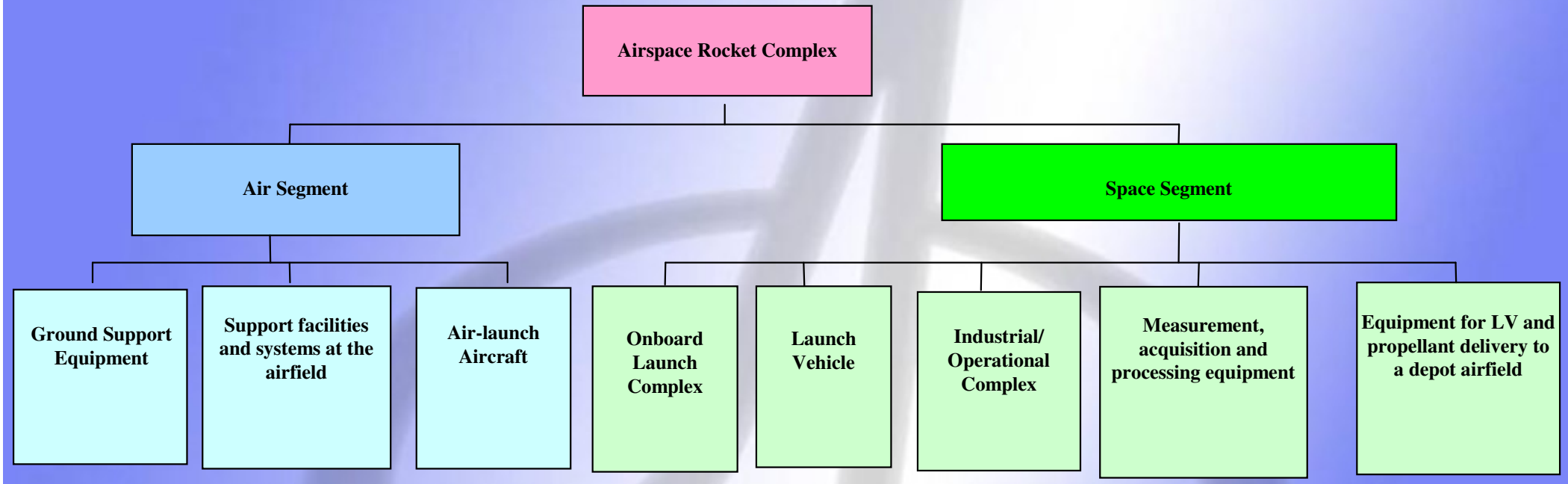

ЮЖНОЕ
конструкторское бюро

# Launch Vehicle (Version 1)

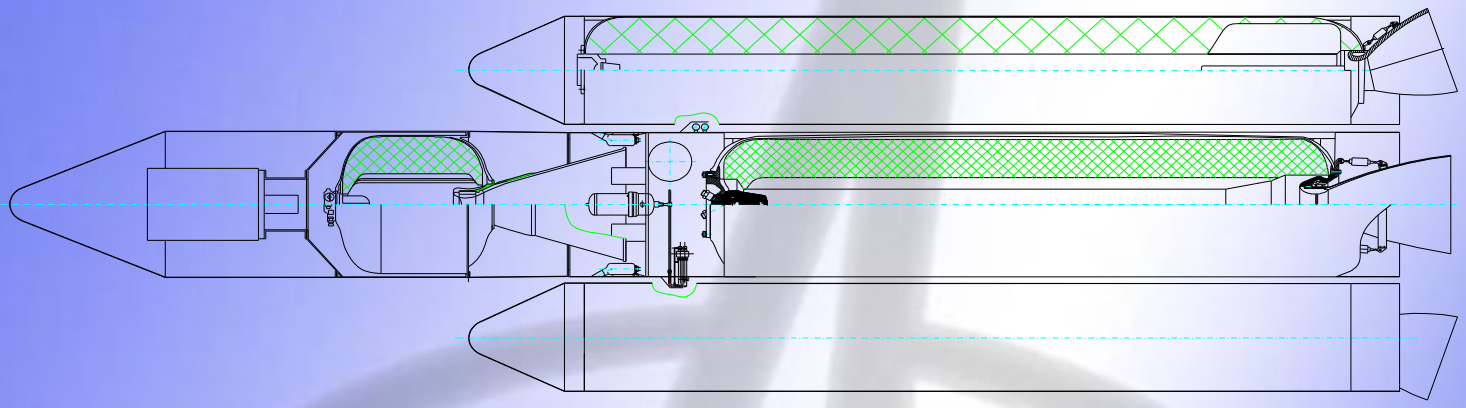

| Specification | Booster | Stage 2 | Stage 3 |
|---|---|---|---|
| Propellant | HTPB | HTPB | HTPB |
| Propellant mass, kg | 3,000 | 2,000 | 490 |
| Vacuum thrust, kgf | 21,773 | 12,320 | 4,525 |

The LV launch mass is ~ 6,600 kg.
The payload capability to a 500km 97.4-deg inclined circular orbit is 40 kg.

ЮЖНОЕ
конструкторское бюро

# Launch Vehicle (Version 2)

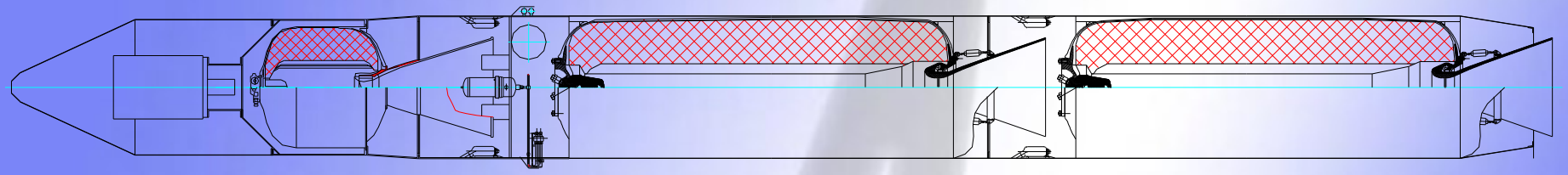

| Specification | Stage 1 | Stage 2 | Stage 3 |
|---|---|---|---|
| Propellant | HTPB | HTPB | HTPB |
| Propellant mass, kg | 2,100 | 2,100 | 490 |
| Vacuum thrust, kgf | 13,965 | 13,965 | 3,548 |

The LV launch mass is ~5,560 kg.
The payload capability to a 500km 97.4-deg inclined circular orbit is 40 kg.

ЮЖНОЕ
конструкторское бюро

# Version 1 Accommodation under MiG-31 ALA

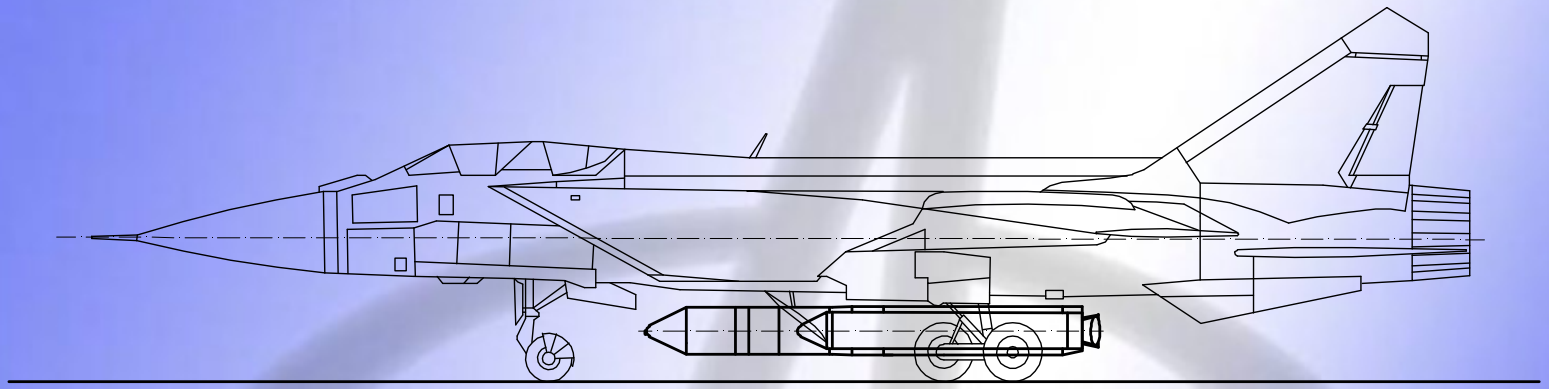

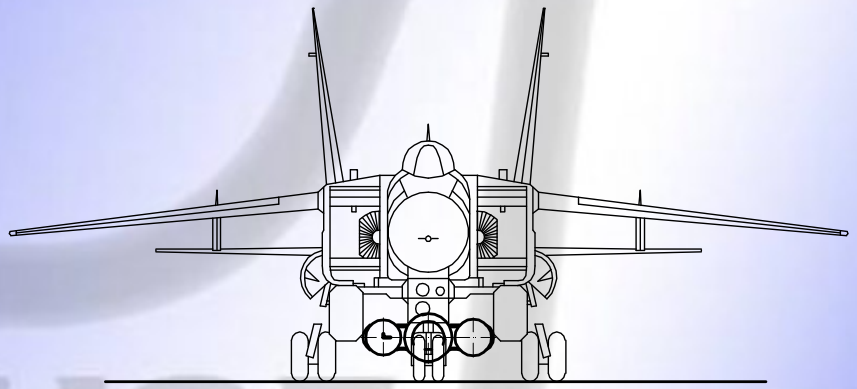

ЮЖНОЕ
конструкторское бюро

ЮЖНОЕ
конструкторское бюро

# Version 2 Accommodation under Su-27 ALA

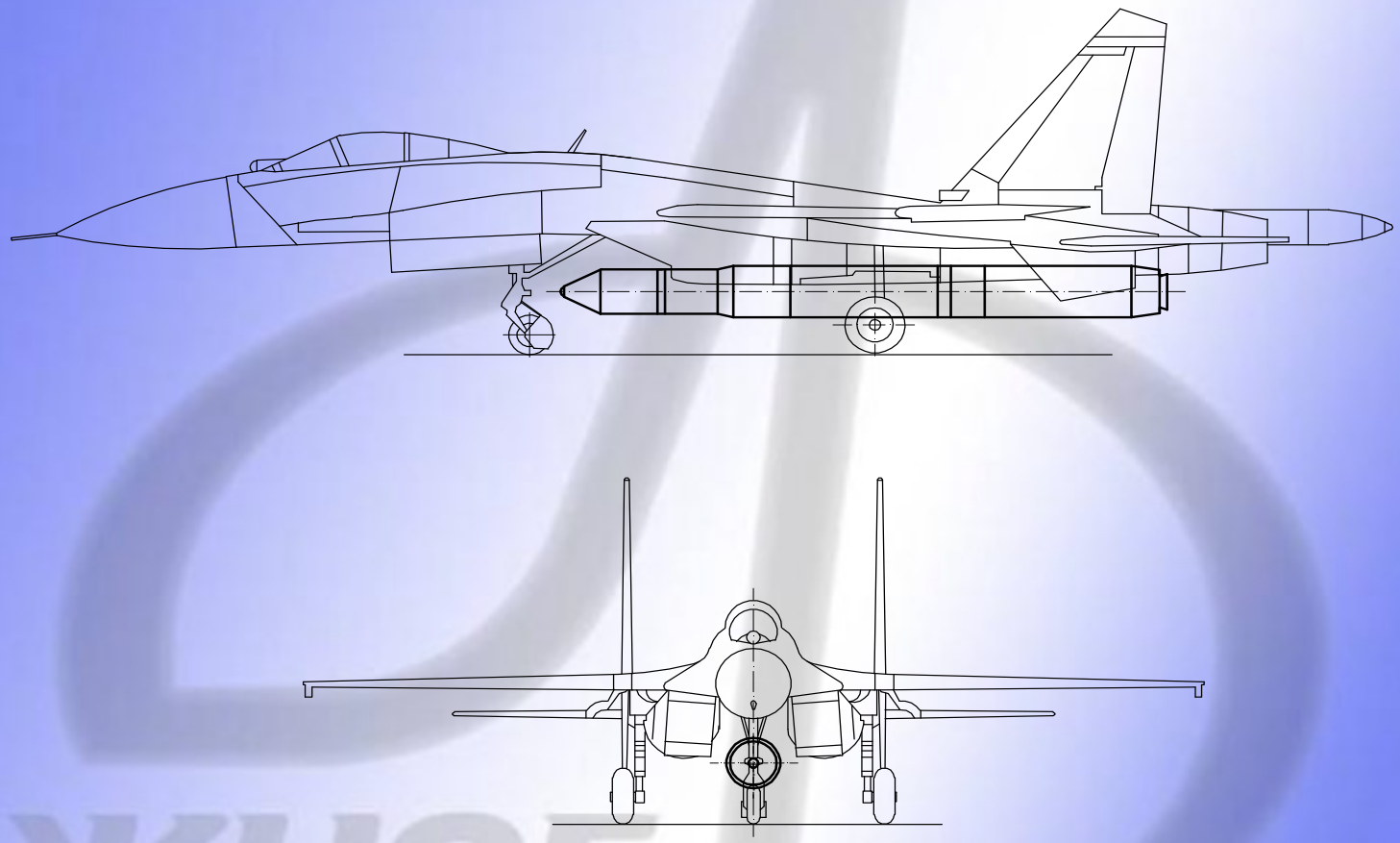

ЮЖНОЕ
конструкторское бюро